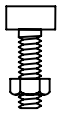

M5x25

#10–24x1"

Ø N/A

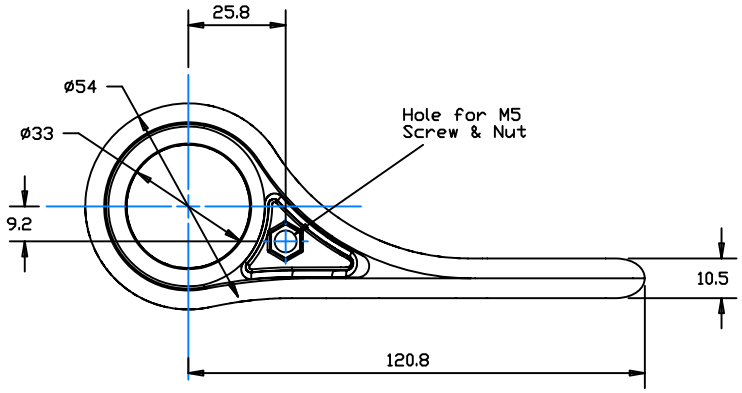

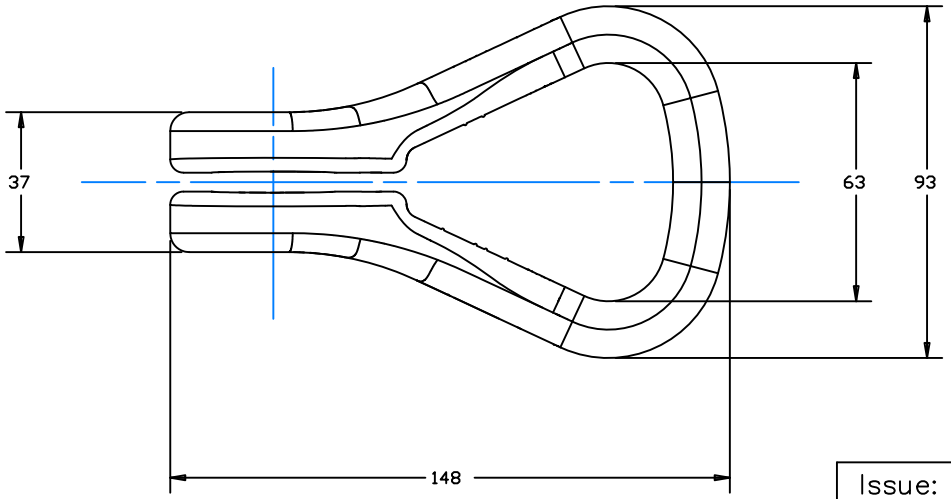

Clamcleat® Rope cleats

Clamcleats Limited
Watchmead
Welwyn Garden City
Hertfordshire AL7 1AP
England

Telephone +44 (0)1707 330101
Fax +44 (0)1707 321269
www.clamcleat.com

Scale– Half Size
All dimensions in mm.

Issue: 1 Dec 2014
IDPT406.dwg

Material:
Nylon

Installation Drawing for: –

Loop

For underground recycling bags